PiÃ¨ces dÃ©tachÃ©es pour

nÂ°	Article	QuantitÃ© utilisÃ©e
1	949657 HEX.SOCKET HD.BOLT M6X12 (10 PCS) (OLD 949657Z)	1
2	880515 PLATE	1
3A	886740 TOP COVER (BLACK) NEW	1
5A	886739 EXHAUST COVER (SILVER GREEN) NEW	1
5	885671 EXHAUST COVER (BLACK) NEW	1
7	882914 HEAD BUMPER	1
8	882913 HEAD VALVE SPRING	1
10	882927 HEAD VALVE (A) (OLD 882912)	1
12	885667 PISTON	1
16A	885664 CYLINDER PLATE	1
18	885669 PISTON BUMPER	1
19	885670 BUMPER SHEET	1
20	884338 VALVE PACKING	1
22	884333 PLUNGER	1
23	881715 O-RING (S-3)	1
24	873093 O-RING (1AP-3)	1
25	987105 O-RING (S-10)	1
26A	887150 VALVE BUSHING	1
27	968643 RETAINING RING (E-TYPE) FOR D4 SHAFT	1
28A	886743 KNOB (BLACK)	1
28	884334 KNOB (GREEN)	1
30	955479 RETAINING RING (E-TYPE) FOR D6 SHAFT	1
31A	886738 BODY ASS'Y (SILVER GREEN) NEW	1
31	885662 BODY ASS'Y (ZWART) NEW	1
34A	886741 PROTECTOR (BLACK) NEW	1
34	885675 PROTECTOR (SILVER) NEW	1
35	885689 TRIGGER ARM (C)	1
36	885657 TRIGGER ASS'Y (C)	1
37	881951 ROLL PIN D2.5X16	1
39	885638 PUSHING LEVER SPRING NEW	1
40A	887700 PUSHING LEVER (B) NEW	1
40	885639 PUSHING LEVER (B) NEW	1
41	881765 RATCHET SPRING	2
42A	886742 ADJUSTER (BLACK) NEW	1
42	884325 ADJUSTER (GREEN)	1
43	885688 PUSHING LEVER (A)	1
44	881751 NOSE CAP (A)	1
46	884342 GASKET (B)	1

HiKOKI

PiÃ¨ces dÃ©tachÃ©es pour

nÂ°	Article	QuantitÃ© utilisÃ©e
47A	884343 CAP (A) (SILVER GREEN) 1/4-18NPT NEW	1
49	949821 HEX.SOCKET HD.BOLT M5X16 (10 PCS)	3
50	885661 WASHER NEW	1
51	949757 HEX.SOCKET HD BOLT M5X20 (10 PCS)	1
53	949539 ROLL PIN D3X25 (10 PCS)	1
54	884975 ROLL PIN D3X32	1
55	949866 ROLL PIN D3X30 (10 PCS)	1
56	959155 STEEL BALL D3.97 (10 PCS.)	1
57	982454 SPRING (C)	1
58A	886265 CHANGE KNOB (C) (BLACK)	1
58	885658 CHANGE KNOB (C) (GREEN)	1
59	877763 FEED PISTON O-RING (I.D.14)	1
60	884963 VALVE BUSHING (B)	1
61	873570 O-RING (P-18)	1
62	676531 O-RING (P-7)	2
63	884964 VALVE PISTON	1
65A	887178 PLUNGER SPRING N	1
66	878888 O-RING (I.D. 1.8)	2
67A	887679 PLUNGER NEW OCT	1
67	884965 PLUNGER	1
68	884962 VALVE BUSHING (A)	1
69	876465 NYLON NUT M4	3
70	885646 COVER PLATE NEW	1
73	885635 GUIDE PLATE (B)	1
74	885636 BLADE GUIDE	1
75	885634 GUIDE PLATE (A) NEW	1
76	884323 LOCK LEVER	1
77	949685 ROLL PIN D4X32 (10 PCS)	1
78	885656 PIN NEW	1
79	885655 RIBBON SPRING	1
80	949770 ROLL PIN D4X14 (10 PCS)	1
81	885641 MAGAZINE (A)	1
82	885652 HEX. SOCKET HD. BOLT M5X12 (W/SP.WASHER)	1
83	872971 RETAINING RING (E-TYPE) FOR D3 SHAFT	1
84	877371 NYLON NUT M5	1
85	885659 HANDLE ARM NEW	1
86	949812 HEX. SOCKET HD. BOLT M4X10 (10 PCS.)	2
88	885649 SLEEVE NEW	1

HiKOKI

PiÃ¨ces dÃ©tachÃ©es pour

nÂ°	Article	QuantitÃ© utilisÃ©e
90	885643 NAIL RAIL	2
92	885642 MAGAZINE (B)	1
94	885654 NAIL FEEDER	1
95A	887680 SEAL LOCK FLAT HD. SCREW M4X6	1
96A	885650 NYLOCK HEX. SOCKET FLAT HD. BOLT M4X10	1
98	878791 ROLL PIN D2.5X12	1
99	885645 MAGAZINE PROTECTOR NEW	1
100	949754 HEX.SOCKET HD.BOLT M4X16 (10 PCS)	1
101	885653 HEX. SOCKET HD. BOLT M4X14 (W/SP.WASHER) NEW	1
102	883513 WARNING LABEL (A)	1
105	887701 BODY ASS'Y NEW	1
106	887682 TRIGGER ARM SPRING	1
107	887694 TRIGGER ARM (D) NEW	1
108	887695 TRIGGER (D)	1
109	887693 PUSHING LEVER GUIDE NEW	1
110	887675 ROLL PIN D3X35 NEW	1
111	887684 CHANGE KNOB (D) NEW	1
112	887673 SPRING NEW	1
113	887458 ROLL PIN D3X10 (10 PCS) NEW NOV	1
114	305749 SEAL LOCK FLAT HD. SCREW M4X10	1
502	885676 PLASTIC CARRYING CASE NEW	1
504	943277 HEX. BAR WRENCH 3MM	1
505	944458 HEX. BAR WRENCH 4MM	1
506	944459 HEX. BAR WRENCH 5MM	1
601	881768 GRIP TAPE (OLD 880349)	1
602A	888213 TAPE (2 PCS.)	2
603	885914 O-RING KIT NEW SEP	1
604	885672 GASKET	1
605	883992 O-RING (I.D. 20.8)	1
606	885668 O-RING (I.D.31.7)	1
607A	880362 O-RING (S-44) (OLD 885690)	1
608	885665 O-RING (I.D.59.6)	1
609	885666 CYLINDER RING	1
611	887916 SINGLE SEQUENTIAL ACTUATION MECHANISM KIT NEW	1

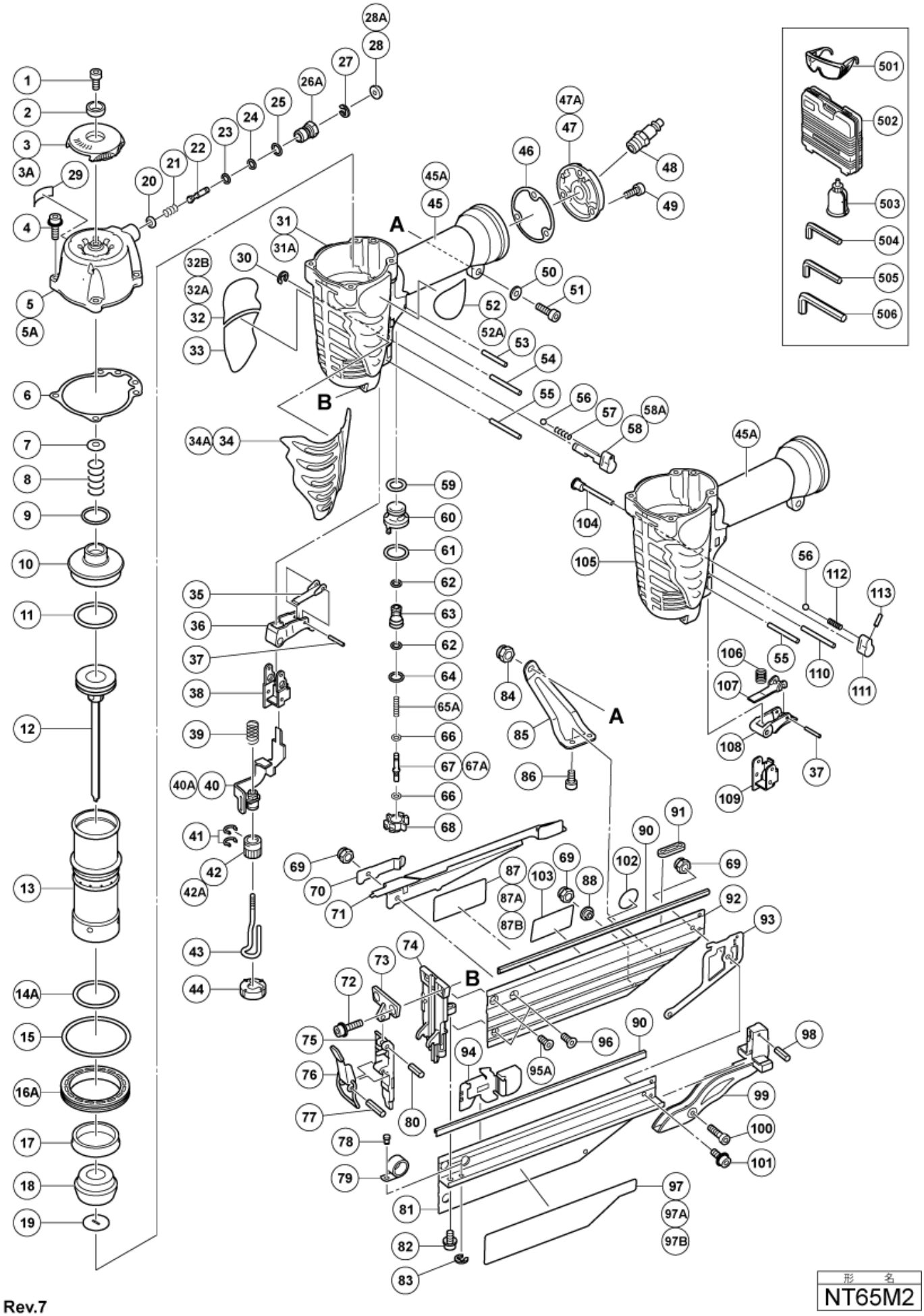

Rev.7

形　名
NT65M2